# IM-1100-WC/WH

# PARTS LIST(220V/60HZ)

## Korean Model : IM500W

## (Ver 2.2)

2024. 01. 10

Revised Mar/2022

# IM-1100-WC/WH

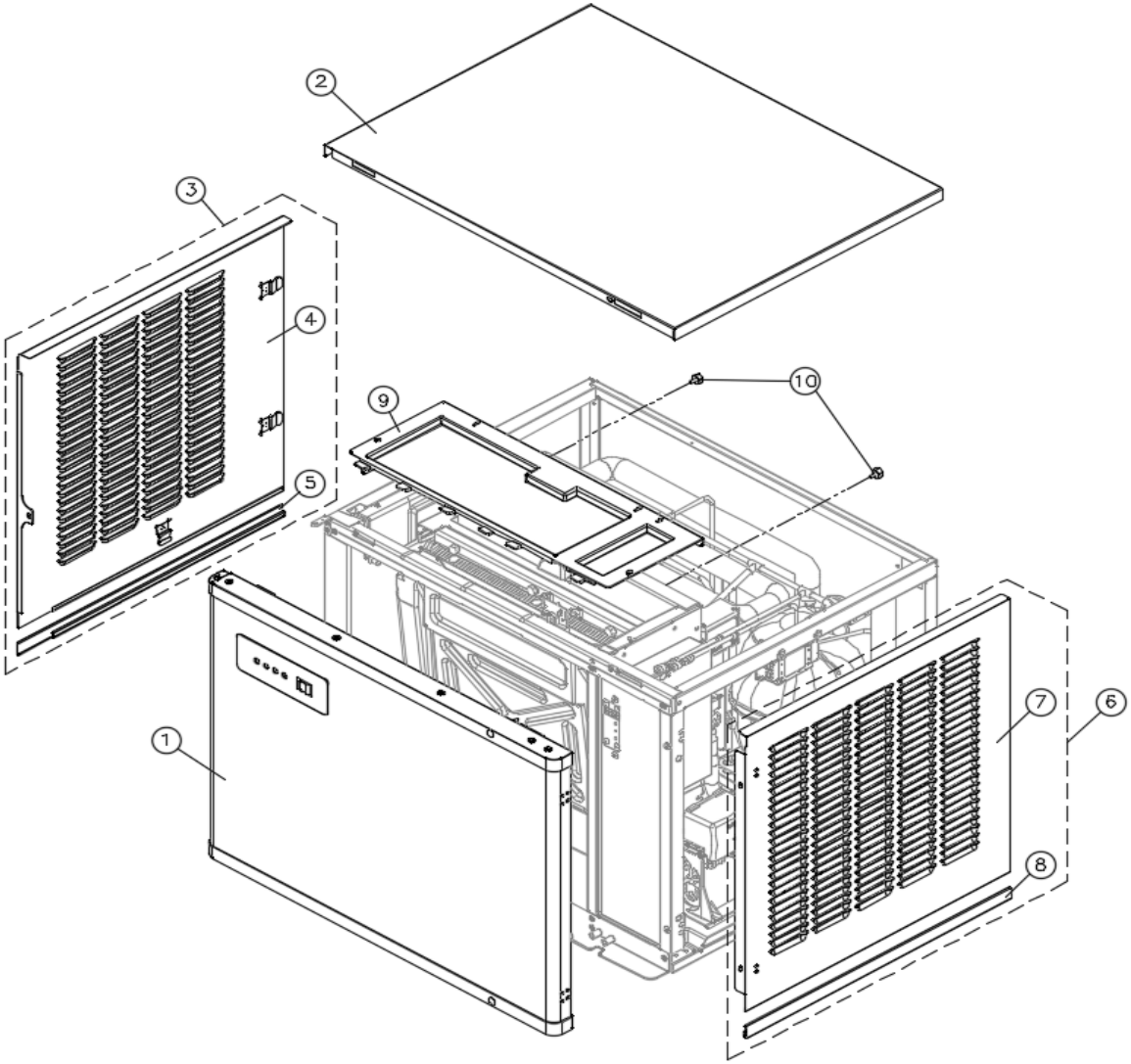


| NO | ITEMS | CODE | Q'TY |
|---|---|---|---|
| 1 | FRONT PANEL | 422002730 | 1 |
| 2 | TOP COVER | 317194410 | 1 |
| 3 | LEFT SIDE PANEL | 420049300 | 1 |
| 4 | LEFT SIDE W-PANEL | 349098900 | 1 |
| 5 | SIDE PANEL B-ENDCAP(L) | 348010200 | 1 |
| 6 | RIGHT SIDE PANEL | 420049410 | 1 |
| 7 | RIGHT SIDE W-PANEL | 349099110 | 1 |
| 8 | SIDE PANEL B-ENDCAP(R) | 348010300 | 1 |
| 9 | EVAP TOP COVER, PLASTIC | 427059100 | 1 |
| 10 | THUMB SCREW | 210804501 | 2 |

Revised Mar/2022

# IM-1100-WC/WH

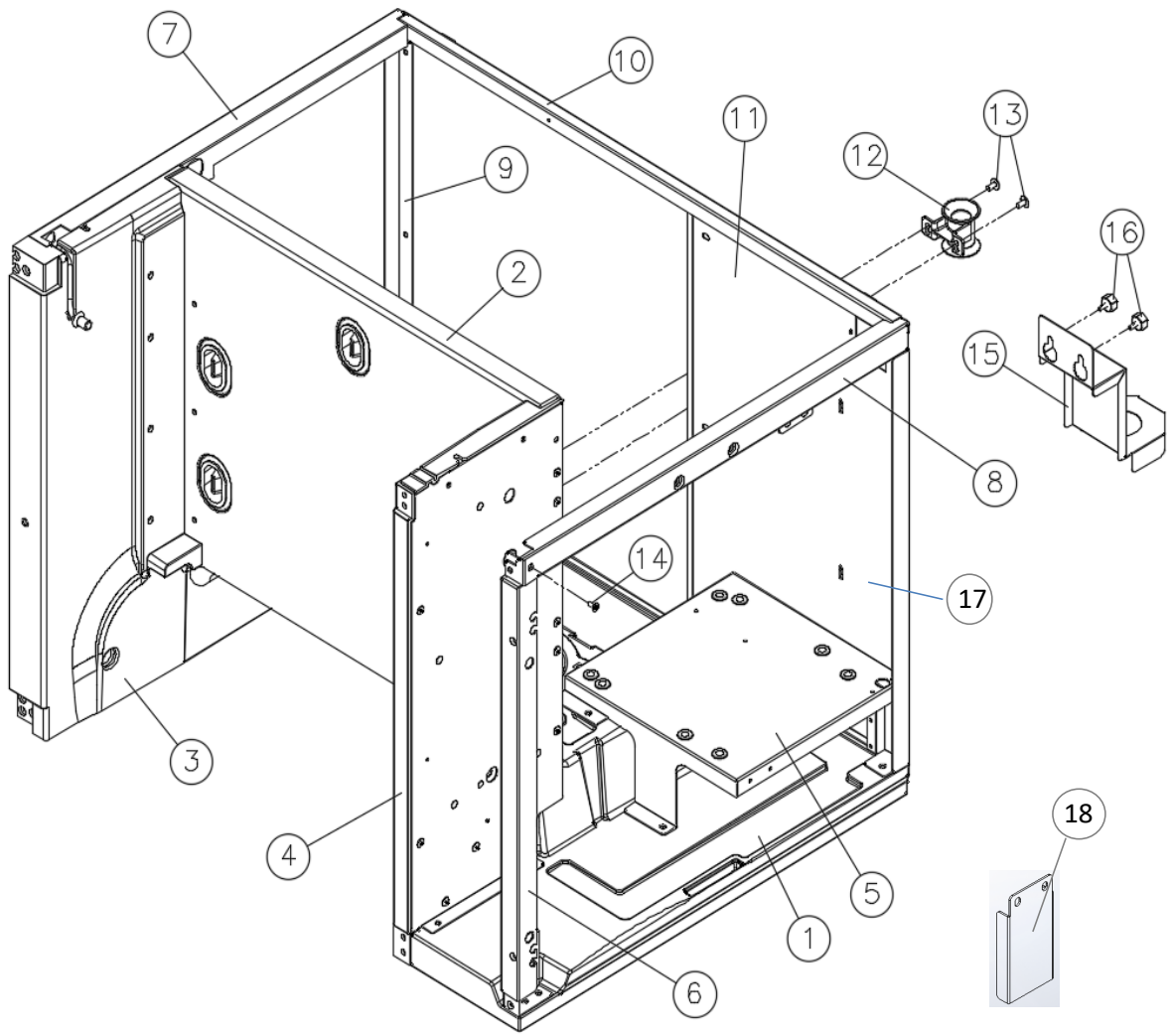


| NO | ITEMS | CODE | Q'TY |
|---|---|---|---|
| 1 | BASE PLATE INSULAION | 483022200 | 1 |
| 2 | EVAPORATOR BACK PANEL | 422002500 | 1 |
| 3 | EVAPORATOR SIDE PANEL (L) | 420049700 | 1 |
| 4 | EVAPORATOR SIDE PANEL (R) | 420049800 | 1 |
| 5 | SUPPORT, COMPRESSOR | 320593620 | 1 |
| 6 | FRONT SIDE FRAME (R) | 348020600 | 1 |
| 7 | SIDE TOP FRAME (L) | 348010700 | 1 |
| 8 | SIDE TOP FRAME (R) | 348011800 | 1 |
| 9 | SIDE REAR FRAME(L) | 348011300 | 1 |
| 10 | REAR TOP FRAME | 348010900 | 1 |
| 11 | BACK PANEL | 349099710 | 1 |
| 12 | WATER LEVEL PROBE HOLDER | 339014100 | 1 |
| 13 | SELF-TAPING SCREW | MTCX0816R | 2 |
| 14 | MACHINE SCREW | MFCX0820R | 1 |
| 15 | WATER PUMP HOLDER | 301181000 | 1 |
| 16 | THUMB SCREW | 210804501 | 2 |
| 17 | SIDE REAR FRAME | 348011400 | 1 |
| 18 | BRACKET | 320593800 | 1 |
| | | | |
| | | | |
| | | | |
| | | | |
| | | | |
| | | | |
| | | | |
| | | | |
| | | | |
| | | | |
| | | | |
| | | | |
| | | | |
| | | | |
| | | | |
| | | | |
| | | | |
| | | | |

Revised Mar/2022

# IM-1100-WC/WH

## [ FRONT PANEL PARTS ]

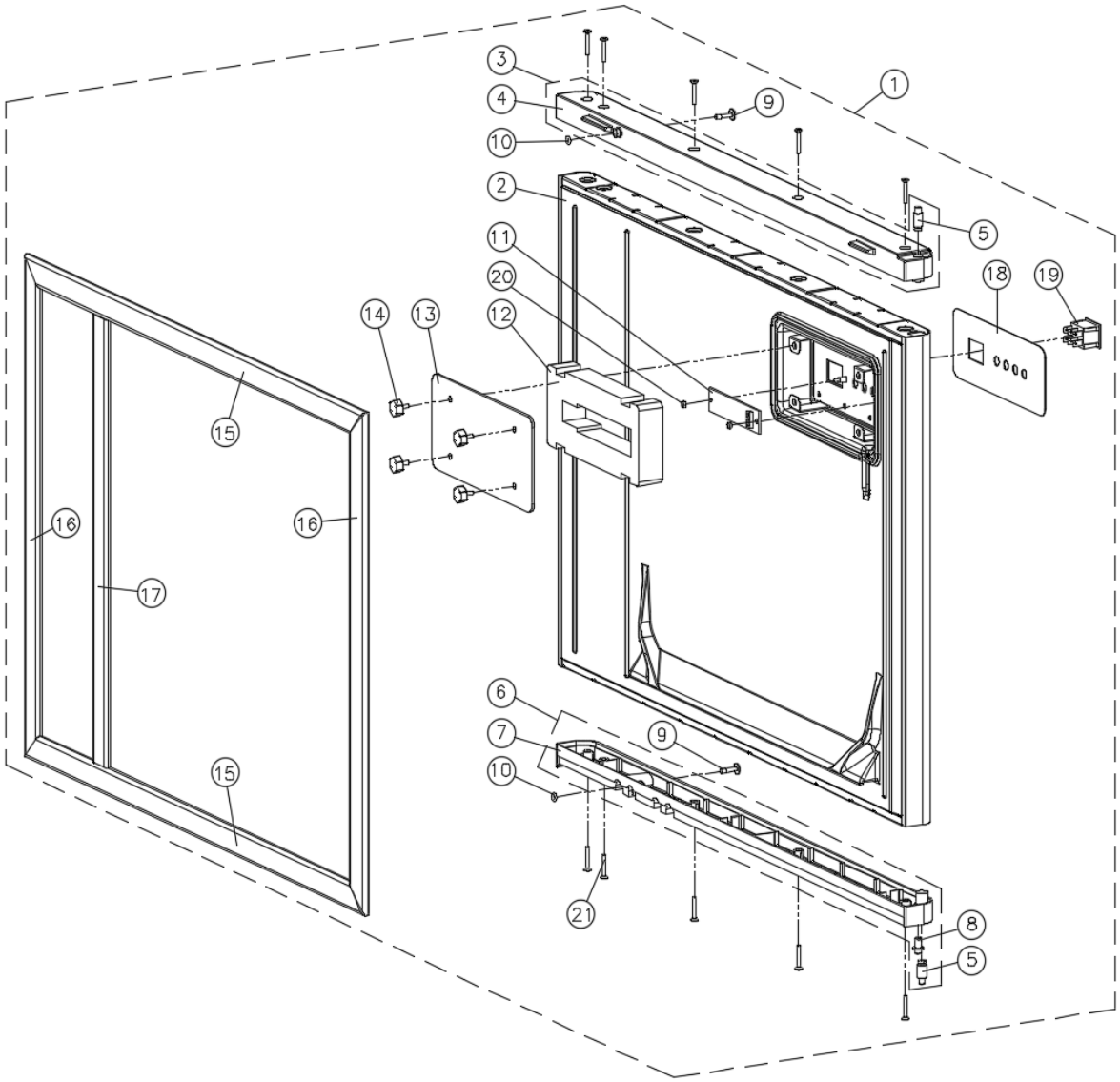


| NO | ITEMS | CODE | Q'TY |
|---|---|---|---|
| 1 | FRONT PANEL COMPLETE ASSY | 422002730 | 1 |
| 2 | FRONT PANEL FOAM ASSY | 422002810 | 1 |
| 3 | FRONT TOP CAP COMPLETE ASSY | 432034910 | 1 |
| 4 | FRONT TOP CAP | 341012602 | 1 |
| 5 | TOP PIN ASSY | 314029900 | 2 |
| 6 | FRONT BOTTOM CAP COMPLETE | 432035010 | 1 |
| 7 | FRONT BOTTOM CAP | 341012702 | 1 |
| 8 | SHAFT HINGE | 321005000 | 1 |
| 9 | FRONT COVER SCREW | 210818600 | 2 |
| 10 | O-RING, SCREW RETAINER | 303036600 | 2 |
| 11 | DISPLAY PCB | 367013000 | 1 |
| 12 | INSULATION, DISPLAY | 306041901 | 1 |
| 13 | COVER, DISPLAY REAR | 317197500 | 1 |
| 14 | THUMB SCREW | 210804501 | 4 |
| 15 | FRONT PANEL GASKET(TOP/BOTTOM) | 656004500 | 4 |
| 16 | FRONT PANEL GASKET (L/R) | 656004500 | |
| 17 | FRONT PANEL GASKET (DIVIDER) | 656004610 | 1 |
| 18 | FRONT DISPLAY LABEL | 440033800 | 1 |
| 19 | ON/OFF/ICE SWITCH | 355024500 | 1 |
| 20 | NUT HEX | 215000600 | 2 |
| 21 | MACHINE SCREW | MFCX0832R | 10 |

Revised Mar/2022

# IM-1100-WC/WH

**[ CONTROL BOX ]**

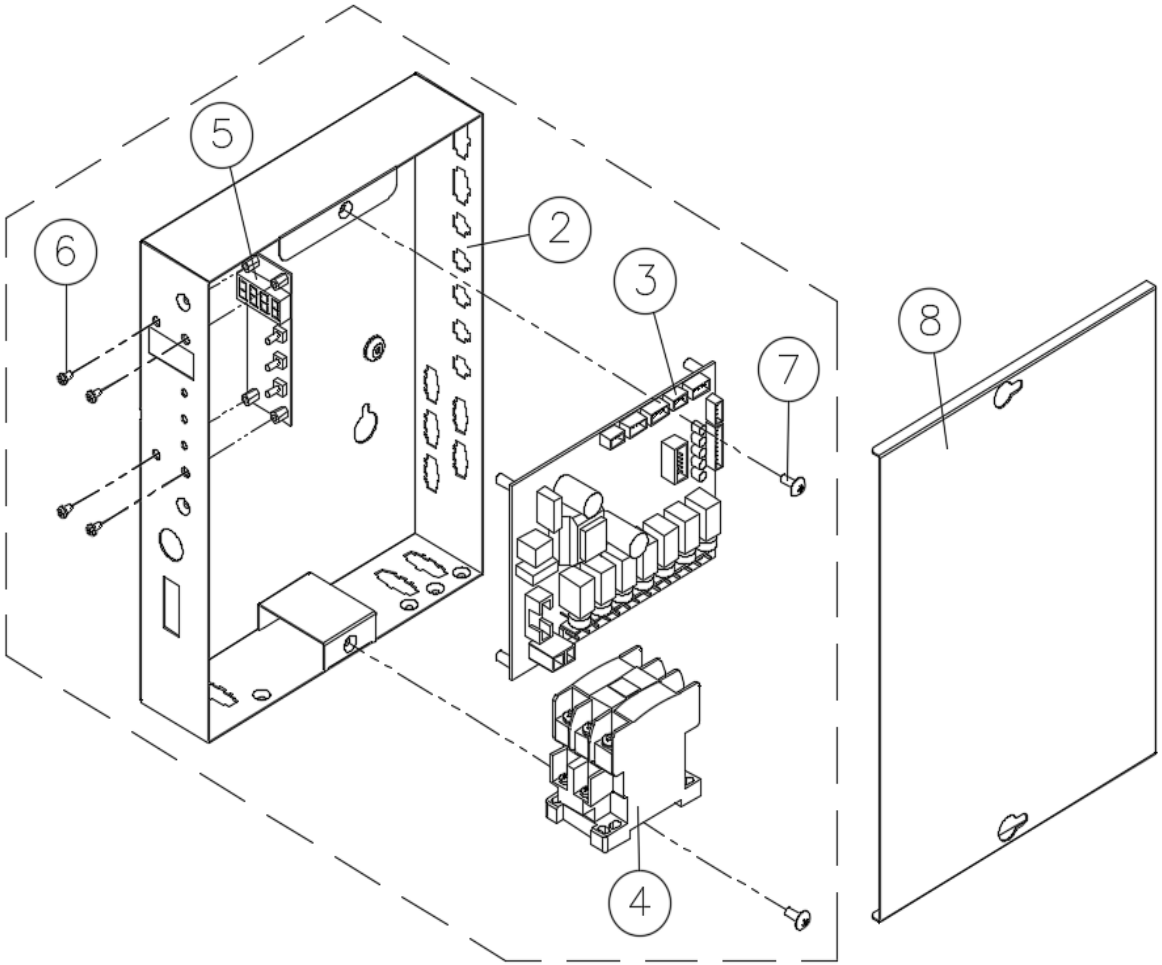


| NO | ITEMS | CODE | Q'TY |
|---|---|---|---|
| 2 | CONTROL BOX | 374143900 | 1 |
| 3 | MAIN CIRCUIT BOARD | 367013400 | 1 |
| 3-1 | MAIN & FND PCB KIT_F90SEC (V1.2) | 367013400F90 | 1 |
| 4 | MAGNETIC CONTACTOR | 322002300 | 1 |
| 5 | FND CIRCUIT BOARD | 367013100 | 1 |
| 6 | MACHINE SCREW | MPCX0610L | 4 |
| 7 | MACHINE SCREW | MTCX0812R | 2 |
| 8 | CONTROL BOX COVER | 374144300 | 1 |
| | | | |
| | | | |
| | | | |
| | | | |
| | | | |
| | | | |
| | | | |
| | | | |
| **NEW DESIGN (starting with serial number VA/ ~ )** | | | |
| 3 | MAIN CIRCUIT BOARD (FLOAT) | 415011900 | 1 |
| 5 | FND CIRCUIT BOARD (FLOAT) | 415011800 | 1 |
| | | | |
| | | | |
| | | | |
| | | | |
| | | | |
| | | | |
| | | | |
| | | | |
| | | | |
| | | | |
| | | | |
| | | | |
| | | | |
| | | | |
| | | | |
| | | | |
| | | | |

Revised Mar/2022

# IM-1100-WC/WH

## [ WATER IN/OUT PARTS ]

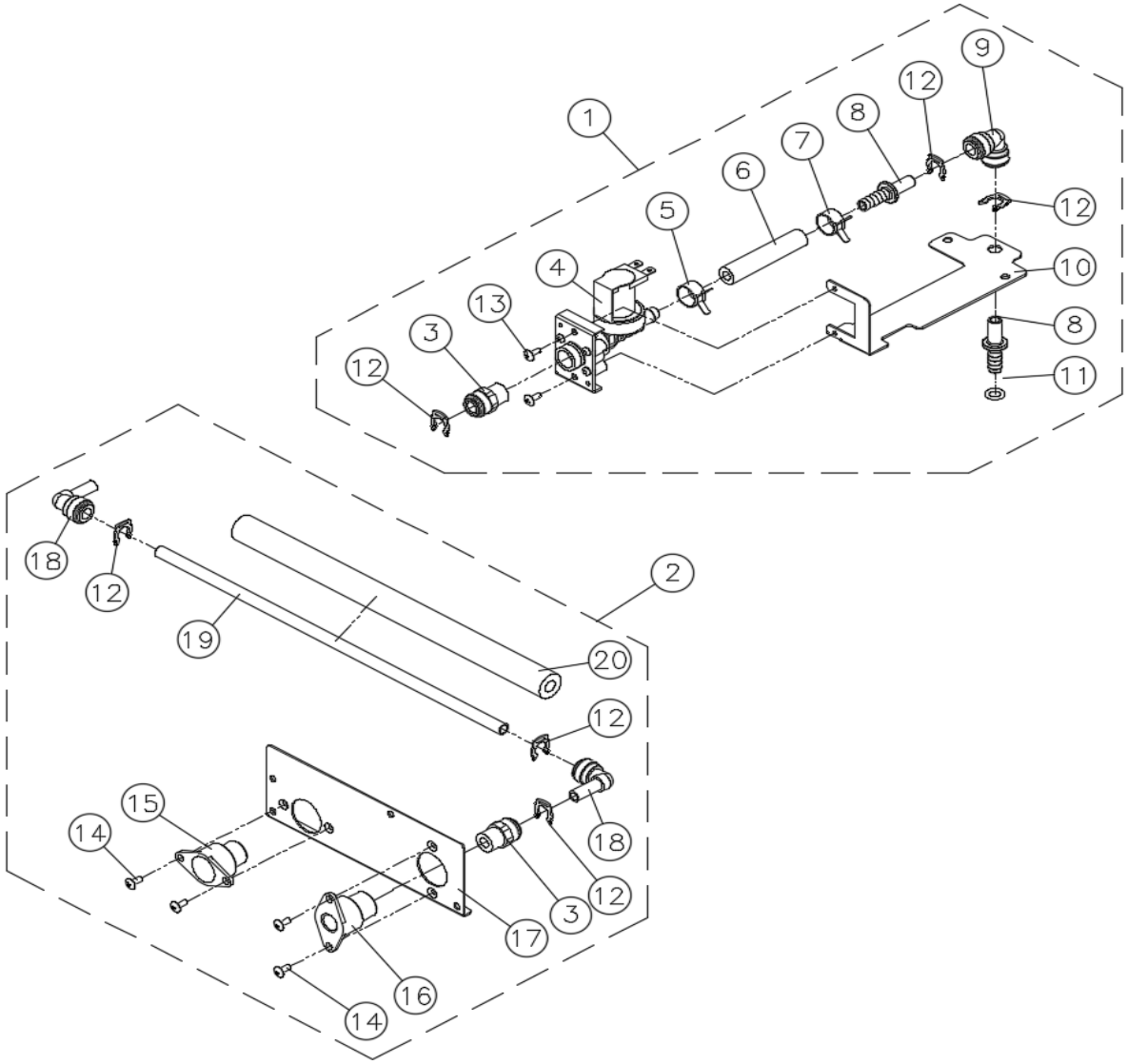


| NO | ITEMS | CODE | Q'TY |
|---|---|---|---|
| 1 | WATER INLET VALVE ASSY | 469003010 | 1 |
| 2 | WATER INLET HOSE ASSY | 469002810 | 1 |
| 3 | STRAIGHT ADAPTOR (3/8") | 398016500 | 2 |
| 4 | WATER INLET VALVE | 340027520 | 1 |
| 5 | BAND SPRING 17 | 203003200 | 1 |
| 6 | BRAIDED SILICONE HOSE | 229027800 | 1 |
| 7 | BAND SPRING 17 | 203003200 | 1 |
| 8 | TUBE TO HOSE STEM | 398014200 | 2 |
| 9 | EQUAL ELBOW | 398012000 | 1 |
| 10 | SUPPORT WATER INLET VALVE | 301173610 | 1 |
| 11 | O-RING(AN110) | 303036400 | 1 |
| 12 | LOCKING CLIP 3/8" | 224002000 | 5 |
| 13 | MACHINE SCREW (M4x8) | MTCX0816R | 2 |
| 14 | MACHINE SCREW (M4x8) | MTCX0816R | 4 |
| 15 | DRAIN SOCKET (NPT 3/4" - ø20) | 215013400 | 1 |
| 16 | WATER INLET SOCKET (3/8" NPT) | 215018700 | 1 |
| 17 | WATER IN-OUT BRACKET | N/A | |
| 18 | STEM ELBOW | 398013801 | 2 |
| 19 | PE TUBE (OD 3/8") | 229013500 | 1 |
| 20 | PIPE INSULATION (ID 10, t5) | 306009000 | 1 |

Revised Mar/2022

# IM-1100-WC/WH

## [ EVAPORATOR PARTS ]

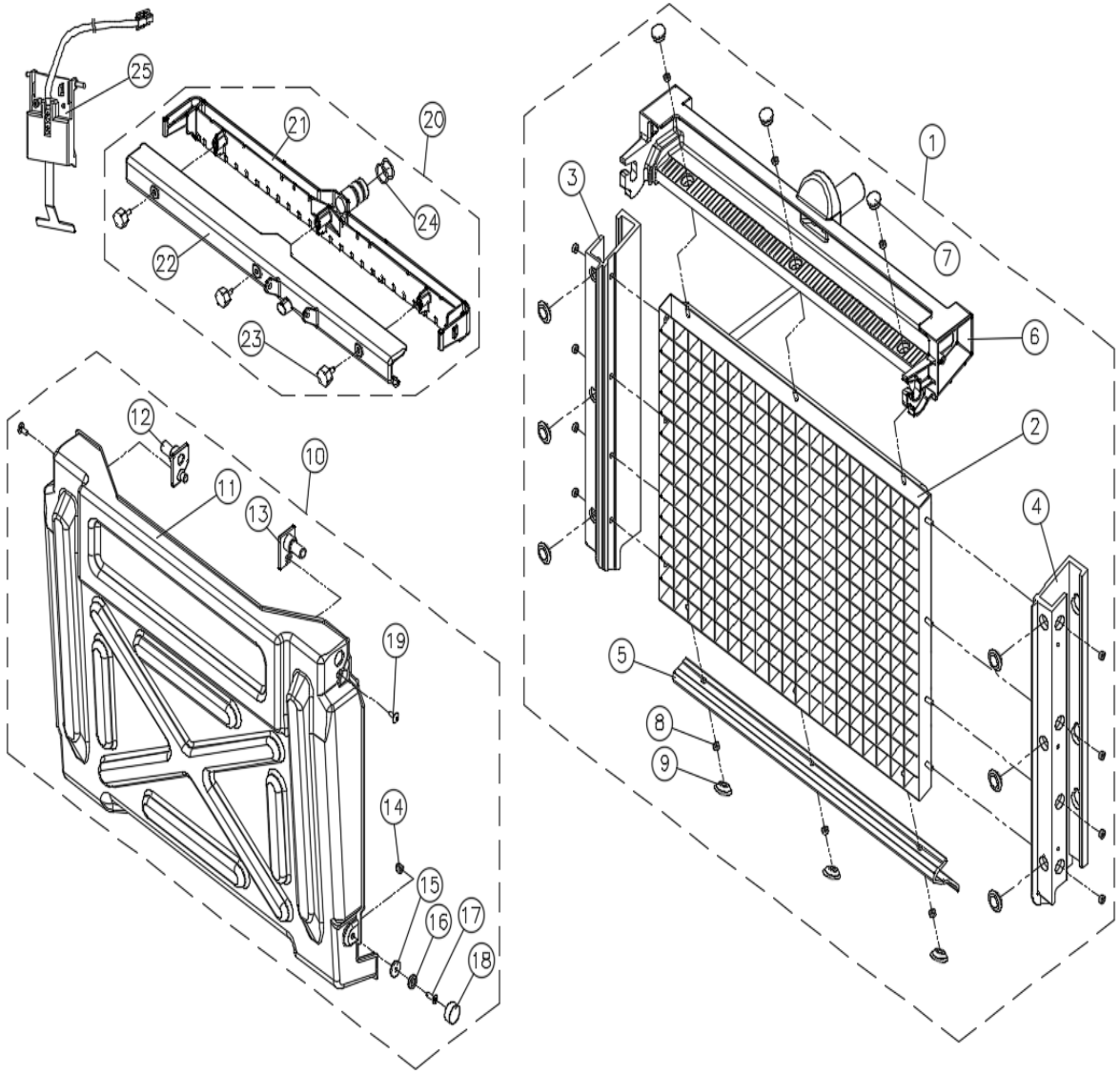


| NO | ITEMS | CODE | Q'TY |
|---|---|---|---|
| 1 | EVAPORATOR COMPLETE ASSY-C | 409041300 | 1 |
| | EVAPORATOR COMPLETE ASSY-H | 409041310 | 1 |
| 2 | EVAPORATOR | N/A | 1 |
| 3 | EVAPORATOR FRAME-L | N/A | 1 |
| 4 | EVAPORATOR FRAME-R | N/A | 1 |
| 5 | EVAPORATOR BOTTOM FRAME | N/A | 1 |
| 6 | EVAPORATOR TOP FRAME | N/A | 1 |
| 7 | EVAPORATOR TOP FRAME-CAP | N/A | 3 |
| 8 | NUT HEX | N/A | 14 |
| 9 | CAP SILICON | N/A | 11 |
| 10 | WATER CURTAIN ASSY | 482002400 | 1 |
| 11 | WATER CURTAIN | N/A | 1 |
| 12 | HANGER-L | N/A | 1 |
| 13 | HANGER-R | N/A | 1 |
| 14 | CAP NUT | N/A | 1 |
| 15 | SPACE-MAGNET | N/A | 1 |
| 16 | MAGNET(Φ12xT3) | N/A | 1 |
| 17 | MACHINE SCREW | N/A | 1 |
| 18 | CAP MAGNET | N/A | 1 |
| 19 | TAPPING SCREW | N/A | 2 |
| 20 | WATER DISTRIBUTOR ASSY | 466004000 | 1 |
| 21 | WATER DISTRIBUTOR-BODY | N/A | |
| 22 | WATER DISTRIBUTOR-COVER | N/A | |
| 23 | THUMB SCREW | 210804501 | 3 |
| 24 | O-RING | 303036300 | 2 |
| 25 | ICE THICKNESS PROBE ASSY | 701003100 | 1 |
| | | | |
| | | | |
| | | | |
| | | | |
| | | | |
| | | | |
| | | | |
| | | | |
| | | | |

# IM-1100-WC_WH

**[WATER-THROUGH ASSY ]**

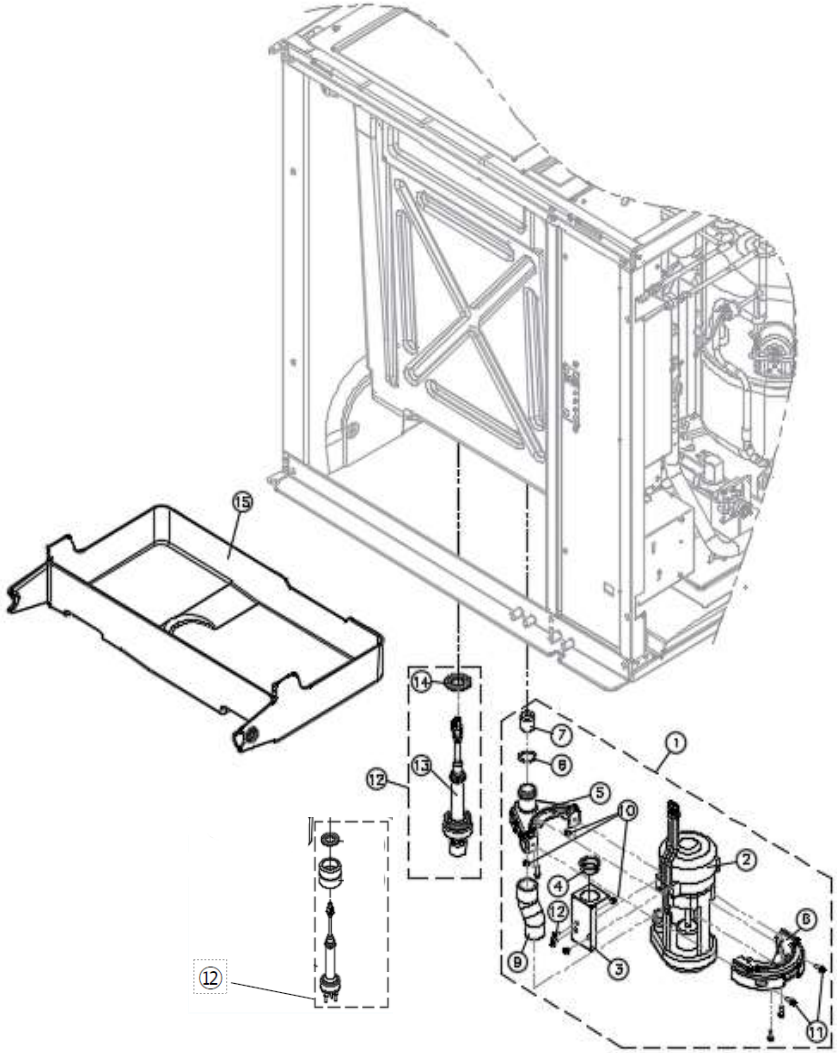


| NO | ITEMS | CODE | EXW USD | Q'TY |
|---|---|---|---|---|
| 1 | WATER PUMP T-ASSY(ORIFICE Φ9) | 406023030 | | 1 |
| 2 | PUMP MOTOR/SP-B6HLEJ26 | 353020401 | | 1 |
| 3 | HARNESS BRACKET(W-PUMP) | 301170901 | | 1 |
| 4 | GROMMET BUSHING | 232003500 | | 1 |
| 5 | WATER PUMP HOLDER(L) | 339013600 | | 1 |
| 6 | WATER PUMP HOLDER(R) | 339013700 | | 1 |
| 7 | PACKING ORIFICE(Φ9) | 319009800 | | 1 |
| 8 | O-RING(AN118) | 303036200 | | 1 |
| 9 | CONNECTING HOSE(PUMP) | 229031700 | | 1 |
| 10 | CAP NUT(M4) | 210806000P | | 2 |
| 11 | MACHINE SCREW(TRUSS M4x8) | MTCX0816R | | 4 |
| 12 | WATER LEVEL FLOAT ASS'Y (NEW) | 701004000 | | 1 |
| 13 | WATER LEVEL RUBBER-CAP | 701003800 | | 1 |
| 14 | W. LEVLE RUBBER-HOLDER | 303036100 | | 1 |
| 15 | WATER VESSEL | 339013402 | | 1 |
| | | | | |
| | | | | |
| | | | | |
| | | | | |
| | **OLD DESIGN (prior to serial numbers starting with VA/ ~ )** | | | |
| **12** | **WATER LEVEL PROBE ASS'Y (OLD)** | **701004000** | | |

Revised Mar/2022

# IM-1100-WC/WH

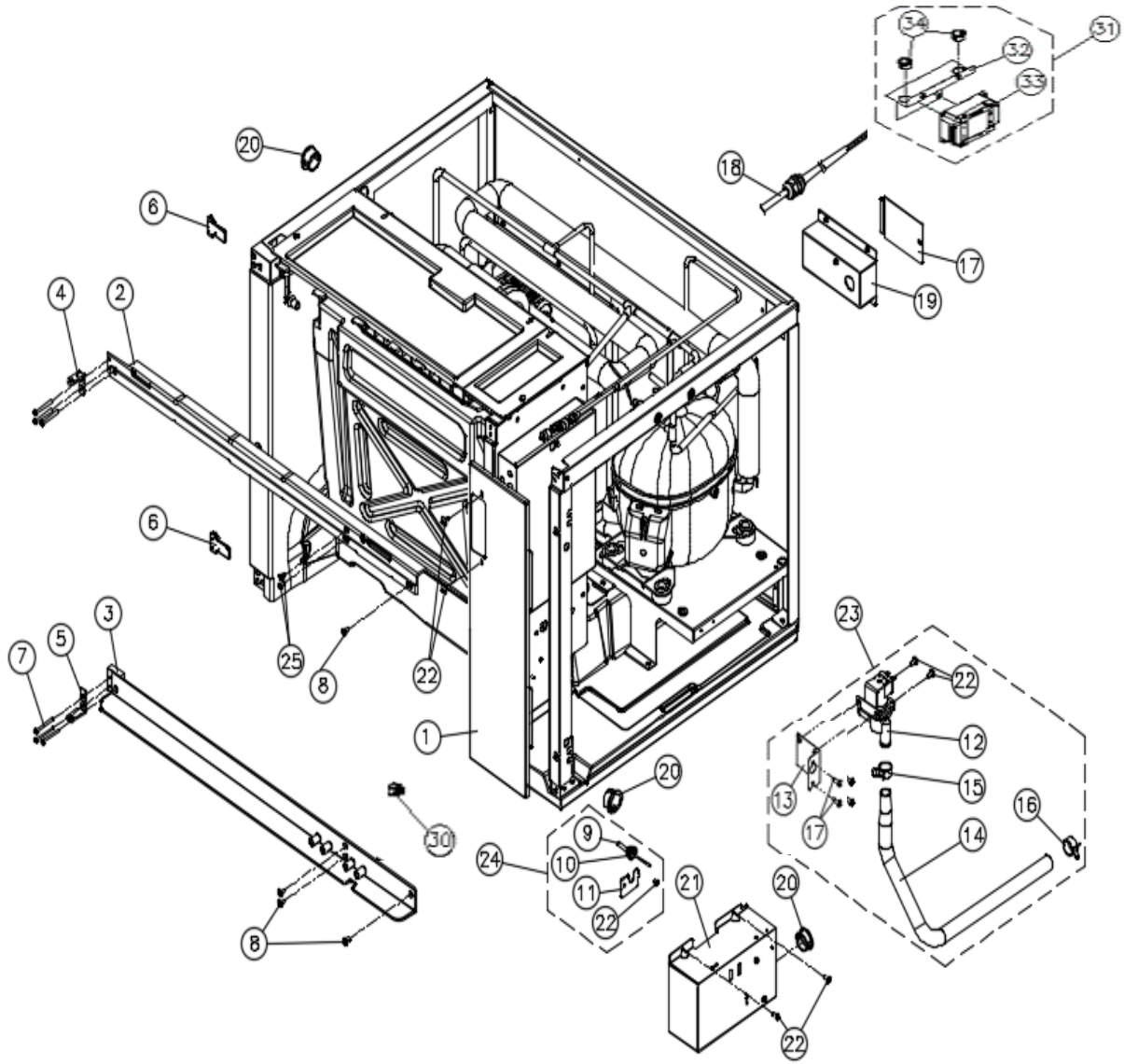


| NO | ITEMS | CODE | Q'TY |
|---|---|---|---|
| 1 | FRONT COVER | 317204600 | 1 |
| 2 | FRONT TOP SUPPORT | 341012401 | 1 |
| 3 | FRONT LOWER SUPPORT | 341012501 | 1 |
| 4 | HINGE BRACKET | 321005110 | 1 |
| 5 | HINGE BRACKET DOWN | 321005210 | 1 |
| 6 | HINGE SUPPORT | 341012300 | 2 |
| 7 | TAPPING SCREW | TFCQ0841R | 6 |
| 8 | MACHINE SCREW | MFCX1022R | 4 |
| 9 | CURTAIN SENSOR | 701002000 | 1 |
| 10 | SENSOR CAP | 319009300 | 1 |
| 11 | COVER BRACKET | 301169400 | 1 |
| 12 | DUMP VALVE | 340025800 | 1 |
| 13 | BRACKET, DUMP VALVE | 301169600 | 1 |
| 14 | PVC PIPE | 229032100 | 1 |
| 15 | BAND SPRING 20 | 203004200 | 1 |
| 16 | BAND SPRING 21 | 203003300 | 1 |
| 17 | JUCTION BOX COVER | 317197900 | 1 |
| 18 | POWER CORD | 722014100 | 1 |
| 19 | JUCTION BOX | 374143800 | 1 |
| 20 | GROMMET BUSHING | 232003500 | 2 |
| 21 | CAPACITOR BOX (BOX ONLY) | 374144001 | 1 |
| 22 | MACHINE SCREW | MTCX0816R | 5 |
| 23 | DRAIN VALVE COMPLETE ASSY | #12~16,20,22 | 1 |
| 24 | SENSOR PARTS COMPLETE | 701003300 | 1 |
| 25 | MACHINE SCREW | MFCX1025R | 2 |
| | | | |
| | | | |
| **NEW DESIGN (starting with serial number VA/ ~ )** | | | |
| 30 | POWER SWITCH | 355025100 | 1 |
| 31 | NOISE FILTER ASSY | 7220143D0 | 1 |
| 32 | NOISE FILTER BRACKET | 301171111 | 1 |
| 33 | NOISE FILTER | 500000900 | 1 |
| 34 | BUSHING | 232003600 | 1 |
| | | | |
| | | | |

Revised Mar/2022

# IM-1100-WC/WH

## [ REFRIGERATION PARTS ]

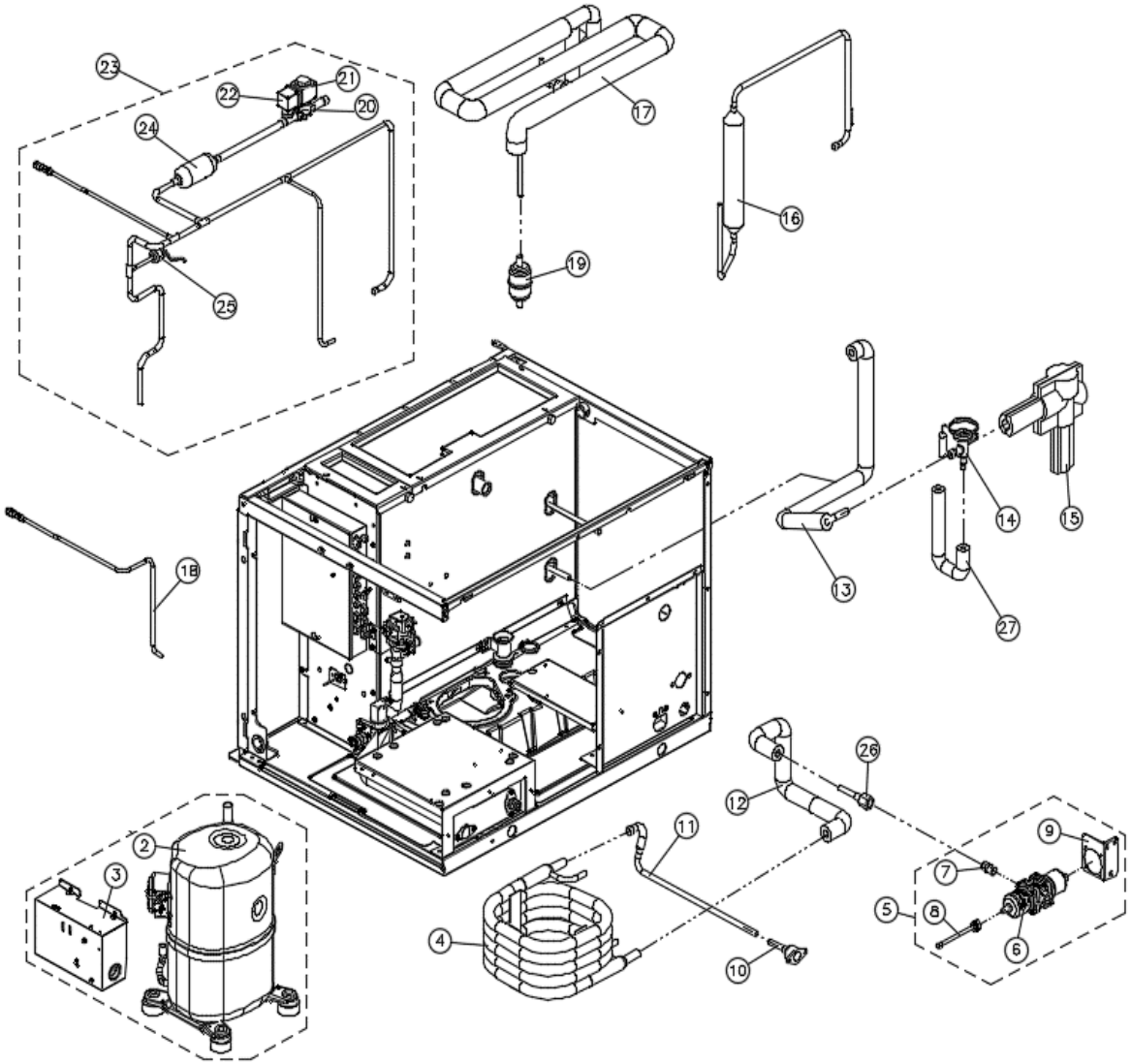


| NO | ITEMS | CODE | Q'TY |
|---|---|---|---|
| 2 | COMPRESSOR | 394022900 | 1 |
| 3 | STARTER KIT | 426070710 | 1 |
| 4 | CONDENSER | 411027600 | 1 |
| 5 | WATER ADJUST VALVE ASSY | #6~9 | 1 |
| 6 | WATER ADJUST VALVE | 340031200 | 1 |
| 7 | WATER FLARE BOLT | 214010600 | 1 |
| 8 | SOLDER ADAPTOR | 215018500 | 1 |
| 9 | BRACKET | 301187700 | 1 |
| 10 | SOCKET (3/4",NPT) | 215015510 | 1 |
| 11 | CONDENSER PIPE_OUT | 325140230 | 1 |
| 12 | CONDENSER PIPE_IN | 325140320 | 1 |
| 13 | HOT GAS PIPE ASSY | 325145600 | 1 |
| 14 | EXPANSION VALVE | 340009300 | 1 |
| 15 | FOAM INDULATION, TXV | 306016700 | 1 |
| 16 | LIQUID RECEIVER PIPE & DRYER | 325145500 | 1 |
| 17 | HEAT EXCHANGE PIPE | 325145710 | 1 |
| 18 | CHARGE SCHRAEDER VALVE | 325151001 | 1 |
| 19 | FILTER DRYER | 372001300 | 1 |
| 20 | SOLENOID VALVE | 340015500 | 1 |
| 21 | SOLENOID VALVE COIL | 340026300 | 1 |
| 22 | SOLENOID VALVE PLUG | 340027300 | 1 |
| 23 | DISCHARGE PIPE ASSY | 325146300 | 1 |
| 24 | STRAINER HOT GAS | 605001800 | 1 |
| 25 | HIGH PRESSURE CUT OUT | 429003900 | 1 |
| 26 | FLARE SLEEVE ASSY | 407024800 | 1 |
| 27 | EXPANSION VALVE INLET PIPE | 325146400 | 1 |
| | | | |
| | | | |
| | | | |
| | | | |
| | | | |
| | | | |
| | | | |
| | | | |
| | | | |