GLASS FIVE SIDED DISPLAY

MADE IN ITALY

CIELO 90-5 NFP
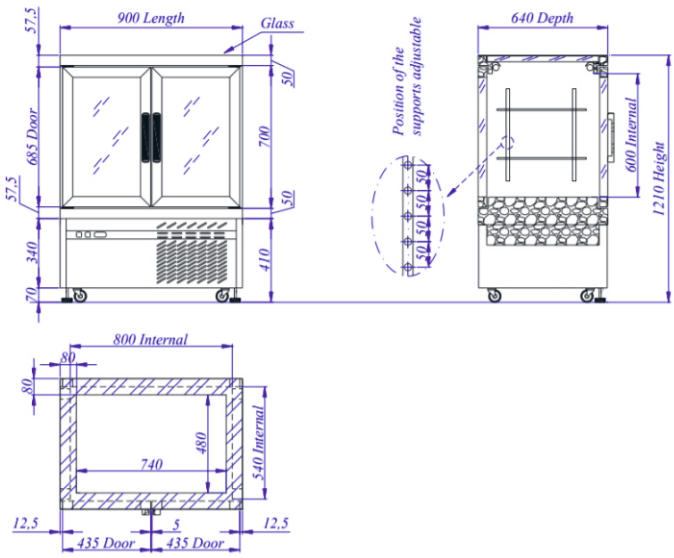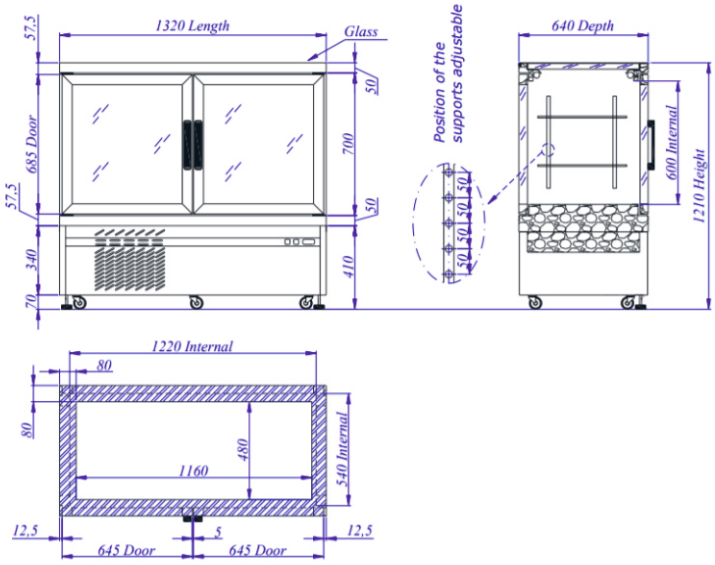
SPECIFICATIONS		
	CIELO 90-5 NFP	CIELO 132-5 NFP
Capacity	9 (Cu.Ft)	14 (Cu.Ft)
Type	SHOWCASE	SHOWCASE
Operating Temp	+23º F / +50º F	+23º F / +50º F
Condenser Fan Cooler	1	2
Compressor	1/2 HP	1/2 HP
Voltage	110V / 60hz / 1HP	110V / 60hz / 1HP
Load Amps	9 A	9 A
Plug Type	5-15P	5-15P
Number of Doors	1	2
Product Dimensions (W x D x H)	35.43 x 25 x 48.42"	52 x 25 x 48.42"
Net Weight	298 Lbs	331 Lbs
Shipping Weight	370 (Lbs)	503 (Lbs)
Shipping Dimensions (W x D x H)	38 x 28 x 57"	55 x 28 x 57"
Includes	Caster + 2 glass shelves +LED Lights	Caster + 3 glass shelves +LED Lights